Parts List			
ITEM	QTY	PART No.	DESCRIPTION
1	2	100210	Ø100 Stab Seal
2	1	BB8773	Seal Replacement Tool Ø100

NOTE 1
See OMM doc 60059-TD-0002 for assembly instructions.

NOTE: 2
WEB LINK:
https://e-sea.bluelogic.no/main.aspx?page=article&artno=BC2018

NOTE 3
Other seal materials available on customers request.

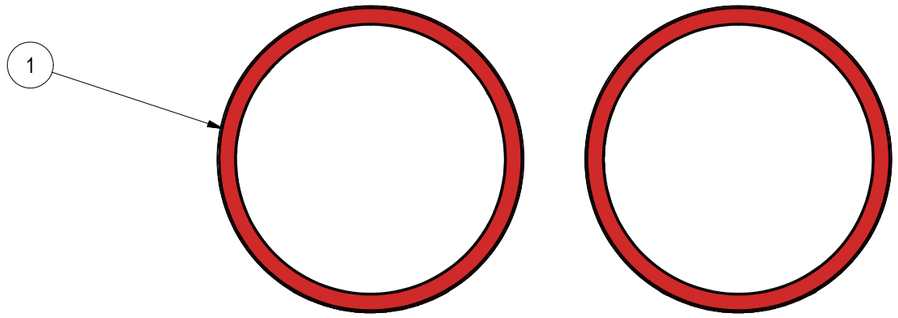

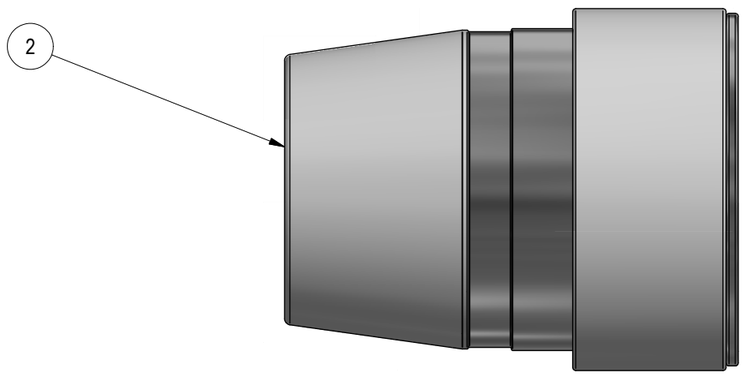

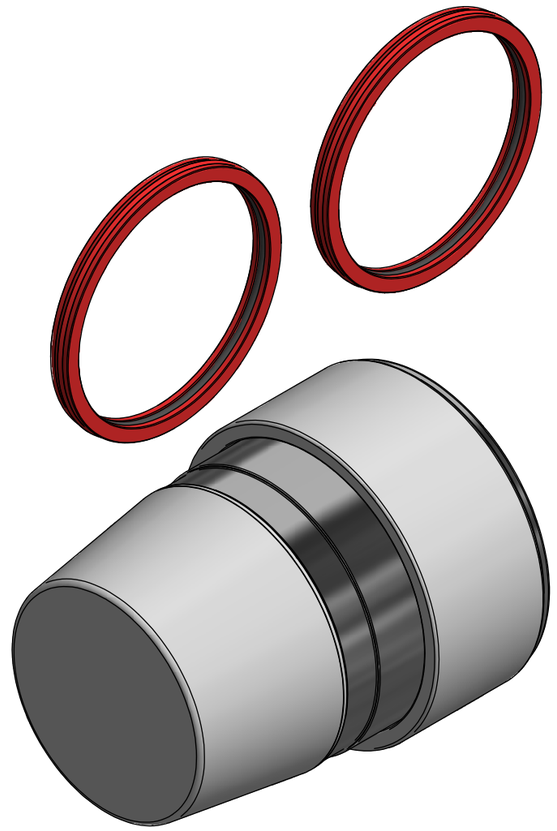

Rev.	Date	Reason for issue	Revision change	Made	Chk'd	Appr.
01	18.11.2024	9-IFU (Issued for Use)		HNJ	TAN	HNJ

BLUE LOGIC

This Drawing is the Property of Blue Logic AS © and must Not be Loaned, Reproduced or Transferred to others without written Permission

Dwg Scale: NTS
Dwg Proj:
Dwg Format: A3

Drawing title: Ø100 SP Hot Stab Spare Part Kit

Drawing number: BC2018

Rev. 01